AC-WBM5T

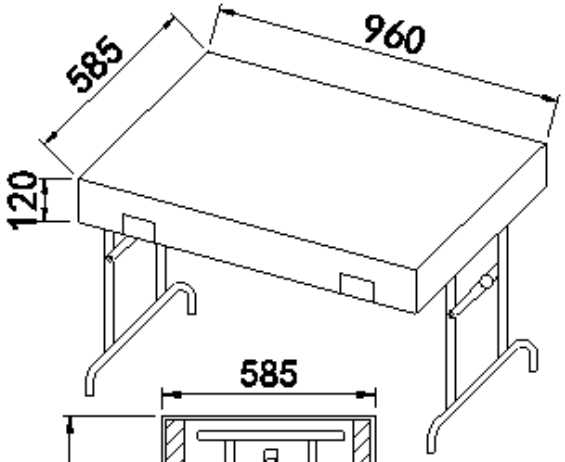
585
960
120

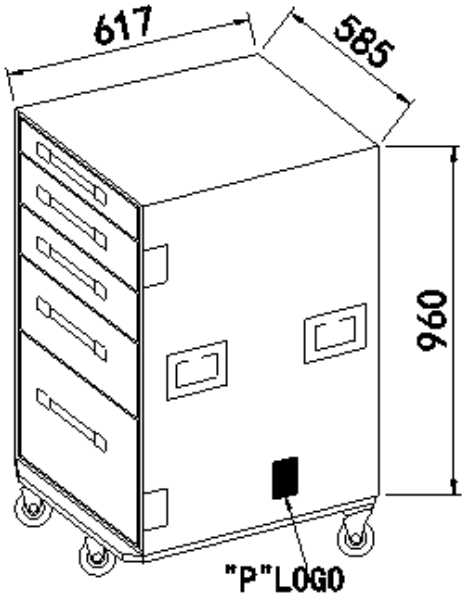
617
585
960
"P"LOGO

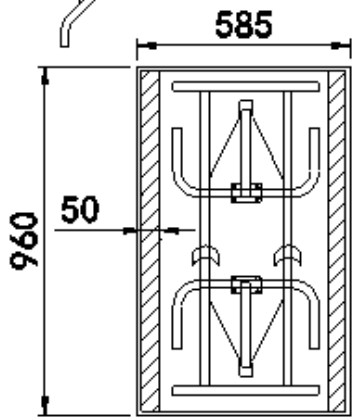
585
960
50

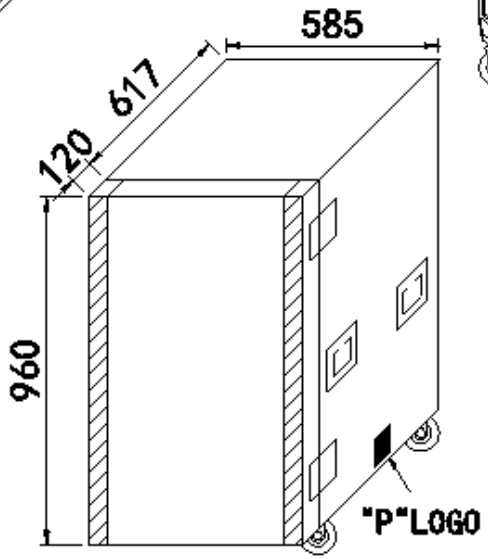
585
617
120
960
"P"LOGO

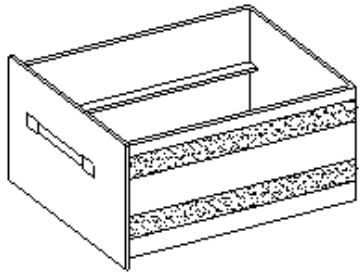

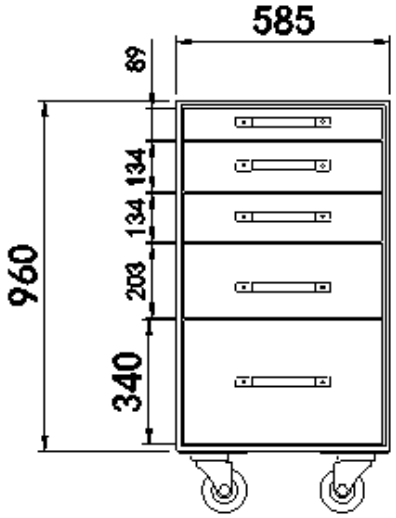
585
89
134
134
203
340
960

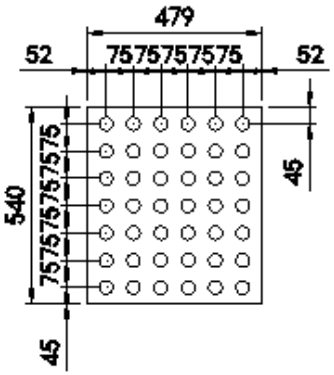
479
52
7575757575
52
540
7575757575
45
45